Reg. No. | | | | | | | | | | | [12AE73]

SEVENTH SEMESTER B.E EXAMINATION, DECEMBER – 2015

VIBRATINS OF ELASTIC SYSTEMS

Time: 3 Hours **Maximum Marks:70**

Instructions:

1. Answer any **FIVE** full Questions.
2. Missing data may be suitably assumed.

1. a. Explain the phenomenon of beat. Derive the resulting amplitude of 2 waves of equal amplitude with frequency difference by $\Delta\omega$. **08**

b. A harmonic motion is given by $x(t) = 5\sin(15t + \frac{\pi}{4})$. Find the **06**

i. Period of motion.

ii. Frequency and

iii. Maximum displacement, velocity and acceleration.

2. a. Determine the Equivalent stiffness of the system shown in the fig 2(a) **06**

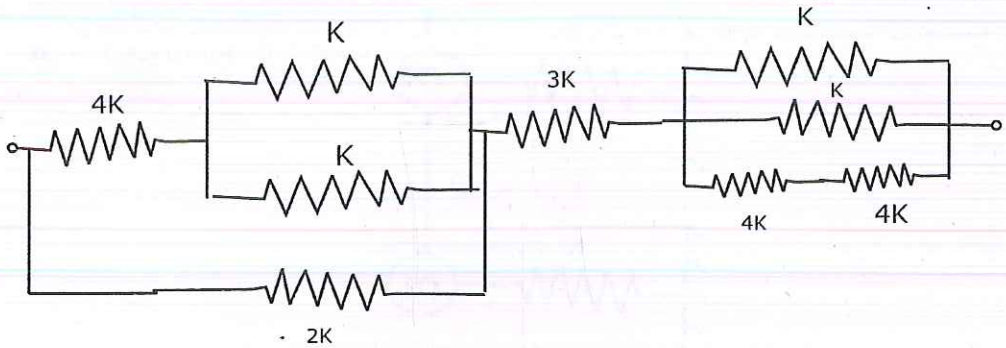

Fig-2a

b. Determine the natural frequency of the system shown in fig 2(b). Evaluate the condition at which there is no vibration. **08**

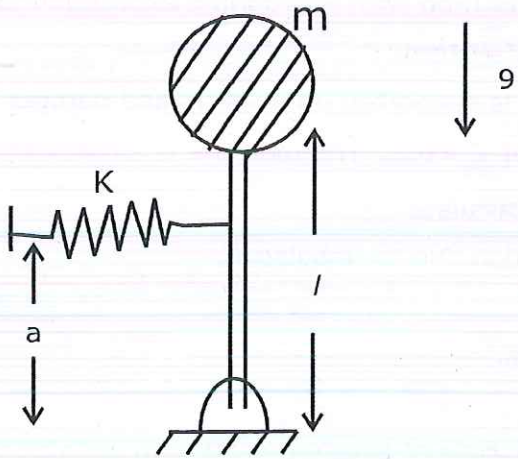

Fig-2b

SCHOOL OF ENGINEERING & TECHNOLOGY
LIBRARY
DATE
JAIN UNIVERSITY-BANGALORE

3. a. Derive the general solution for a Spring-Mass –Damper system and hence define the critical damping also explain the significance of critical damping on vibration. **06**

b. A spring-Mass-Damper system has m=10Kg, K=5N/mm. when the mass is given a velocity of 2m/sec, the force experienced by the mass is 80N. Calculate **08**

i. Critical Damping.

ii. Damping ratio.

iii. Logarithmic decrement.

iv. Ratio of two consecutive amplitudes.

4. a. Derive the equation of motion for the double pendulum shown in fig(4). **07**

b. Calculate the natural frequency is the absence of springs. **07**

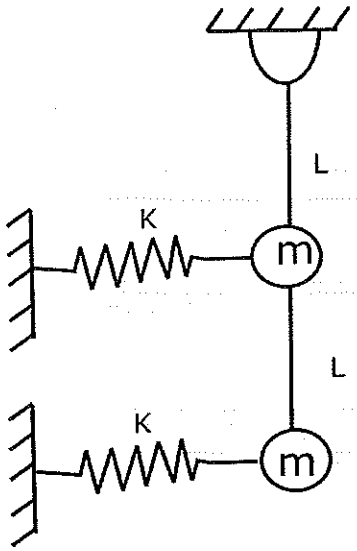

Fig-4

5. a. Define Transmissibility ratio with appropriate expression for a harmonically excited Spring-Mass-Damper system. **05**

b. A machine of 200Kg is supported on a spring and damper of stiffness 16,000N/cm and damping ratio of $\xi = 0.2$. The machine is excited by an unbalanced force of 800N at 3000RPM. Calculate **09**

i. Amplitude of motion due to unbalance.

ii. Transmissibility.

iii. Transmitted force.

6. a. Explain the basic principle of accelerometer with suitable diagram and expression. **06**

b. A vibration measuring instrument has a natural frequency of 7.5H_z and damping **08**

factor of 0.5. Determine the lowest frequency beyond which the amplitude can be measured is within 1% error.

7. a. Explain Rayleigh's method for calculation of first natural frequency of a vibrating system. **07**

b. Determine the first natural frequency of the system shown in Fig 7(b) using Rayleigh's method. **07**

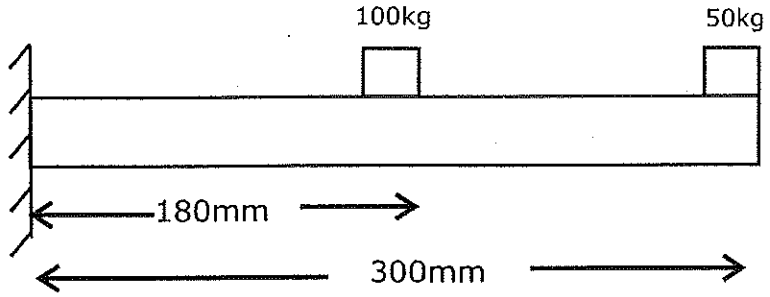

$E=1.96 \times 10^{11}\ N/m^2$

$I=4 \times 10^{-7}\ N/m^4$

Fig-7b

8. a. Derive the general expression for the longitudinal vibration of rod. **07**

b. Determine the mode shapes and frequencies if the rod is fixed at the both the ends. **07**